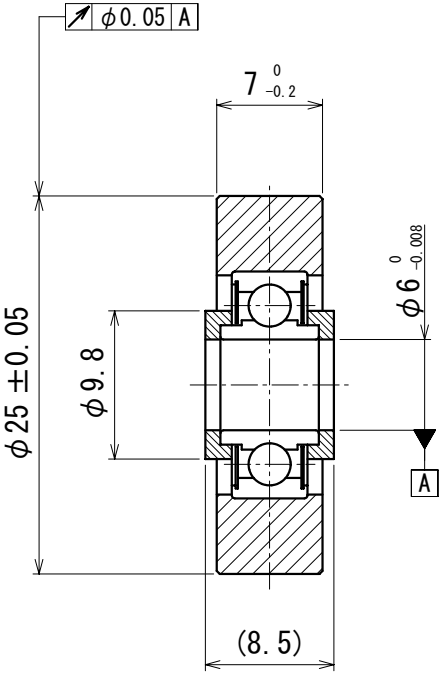

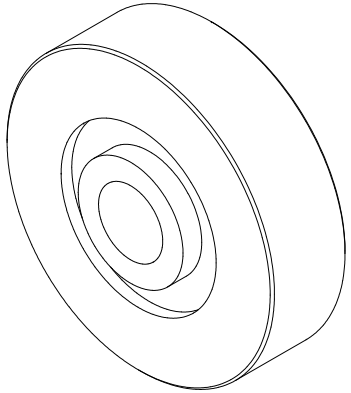

25HFD601