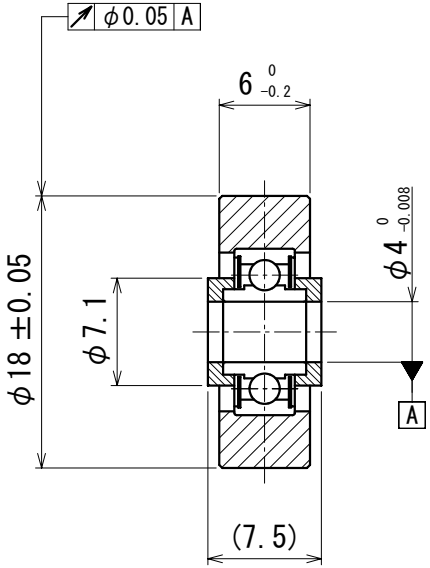

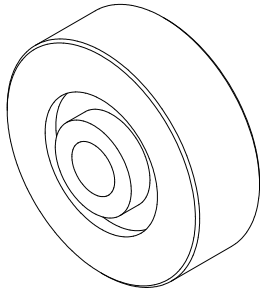

18HFD401